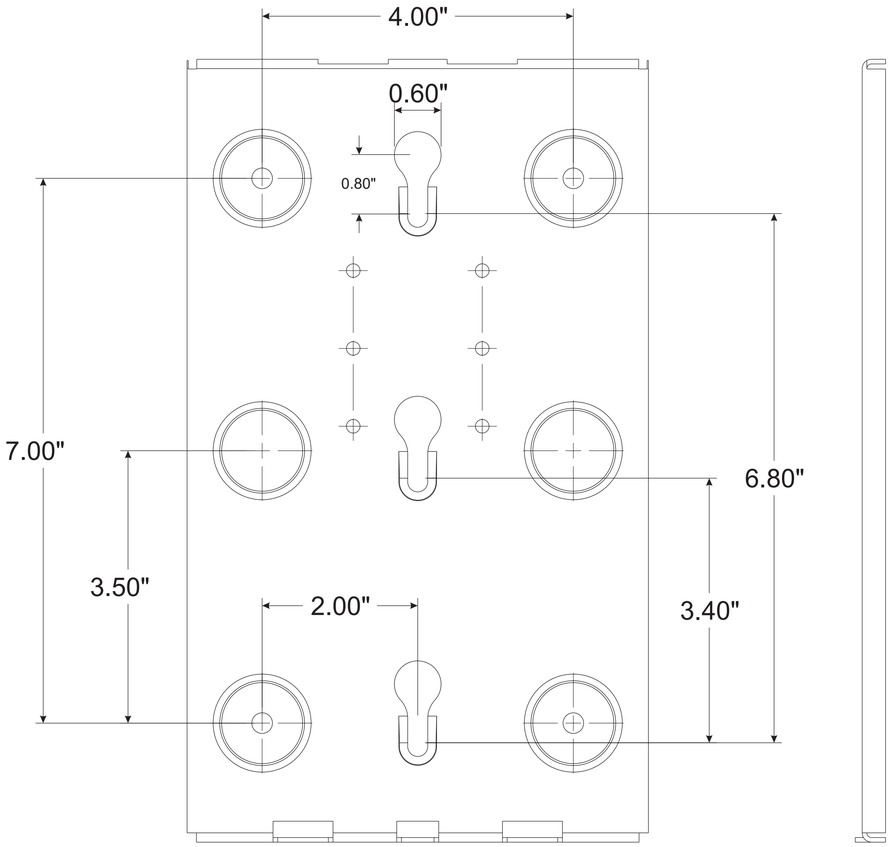
4.00"
0.60"
0.80"
7.00"
6.80"
3.50"
2.00"
3.40"

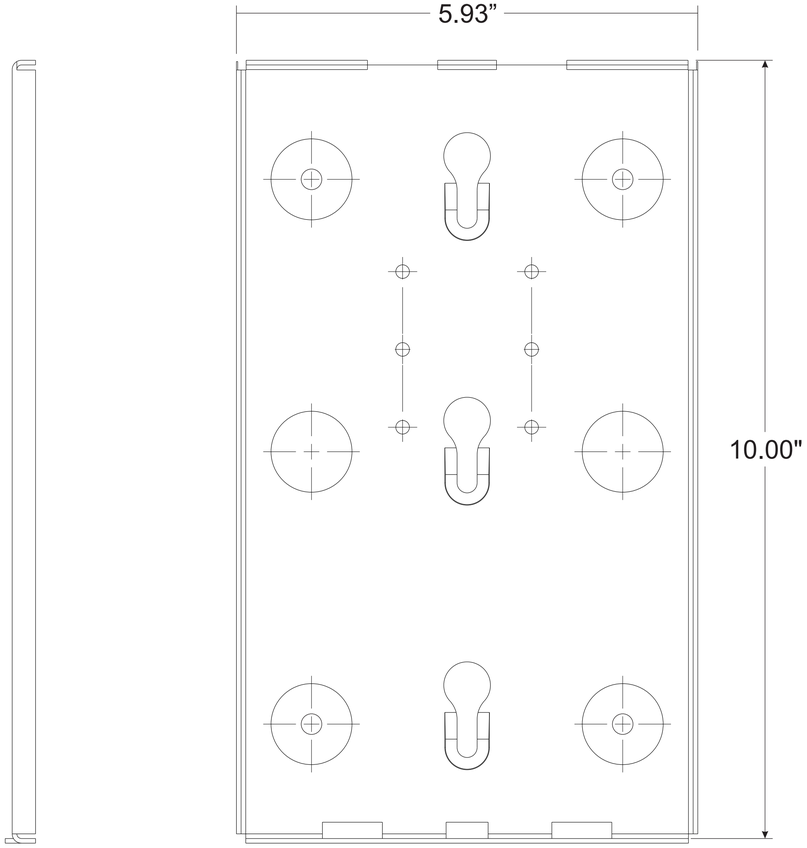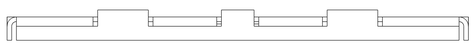
5.93”
10.00"